Experiment 15:

Block Diagram:

A:

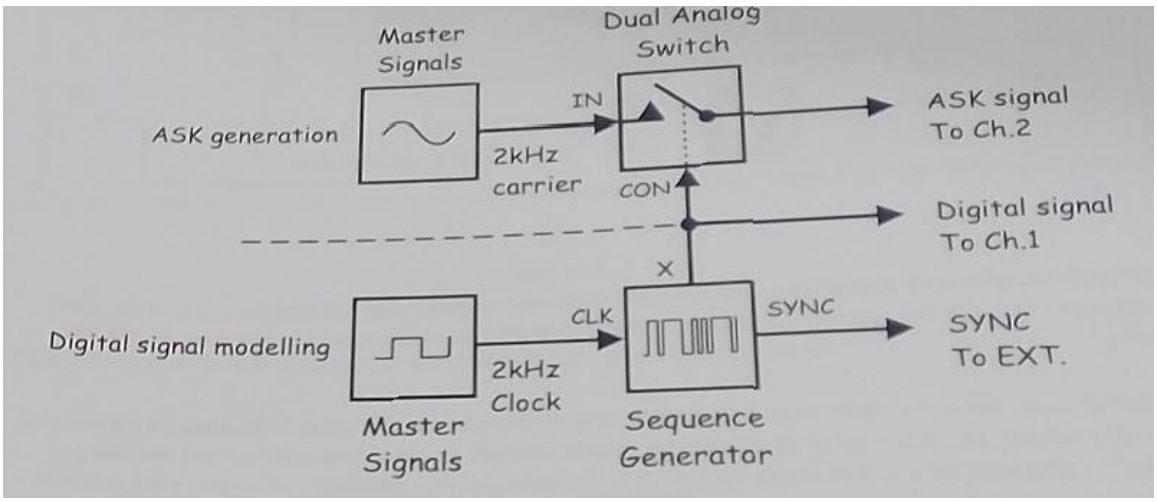

B:

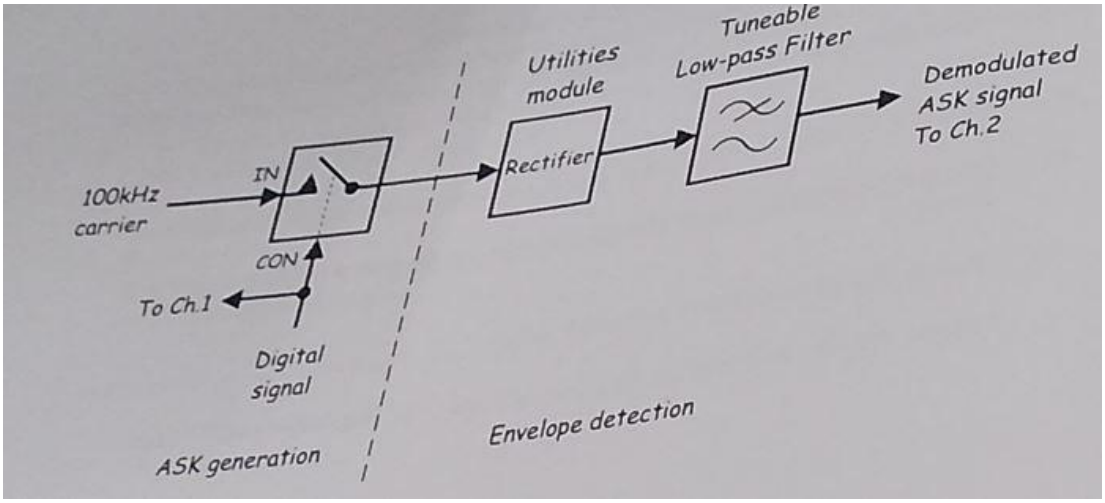

C:

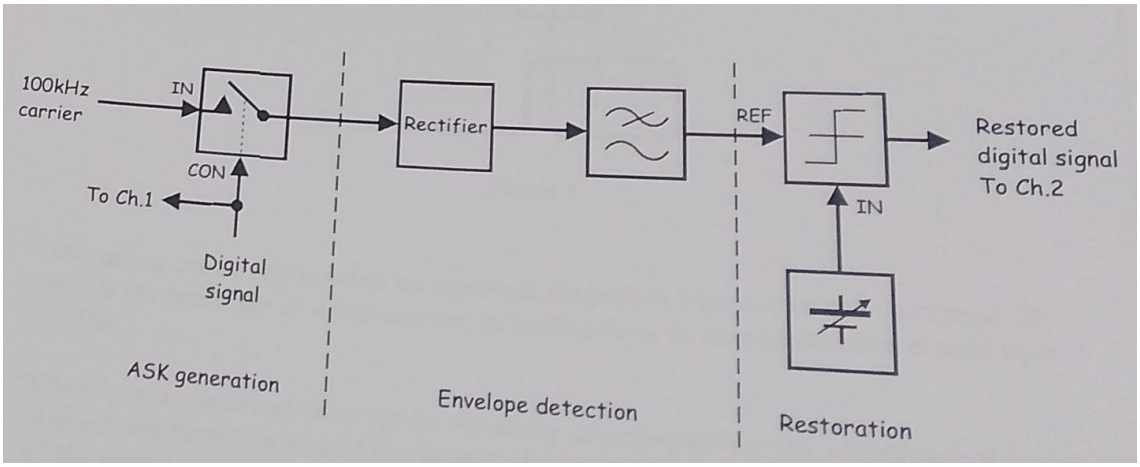

Set up and Result:

A:

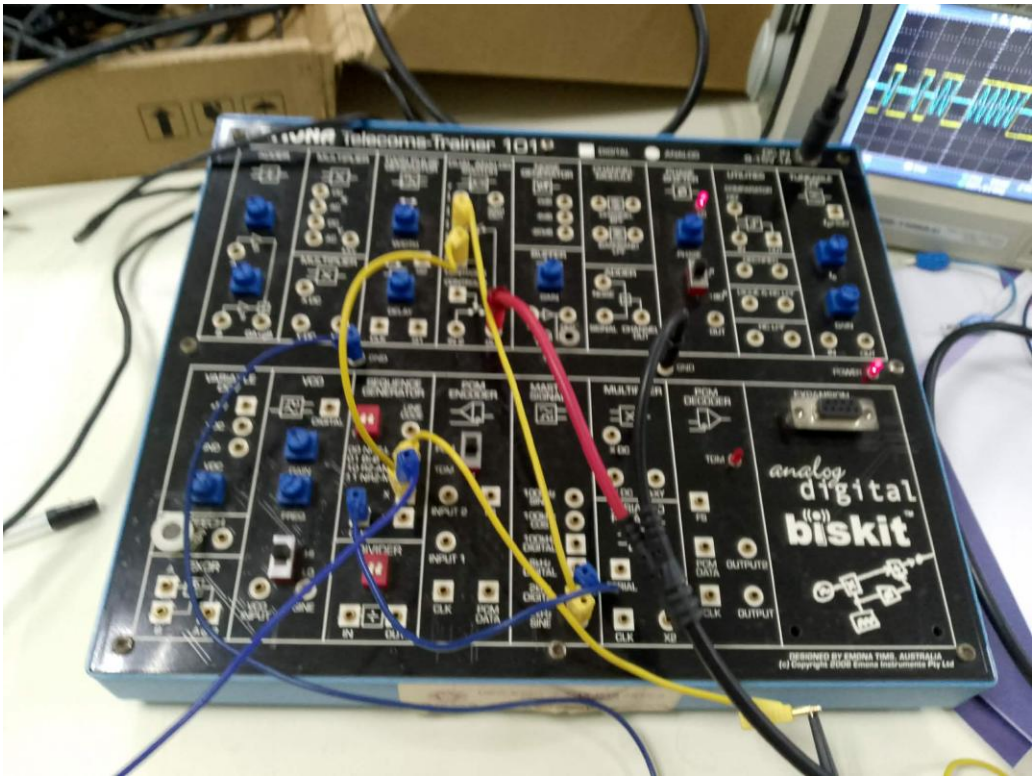

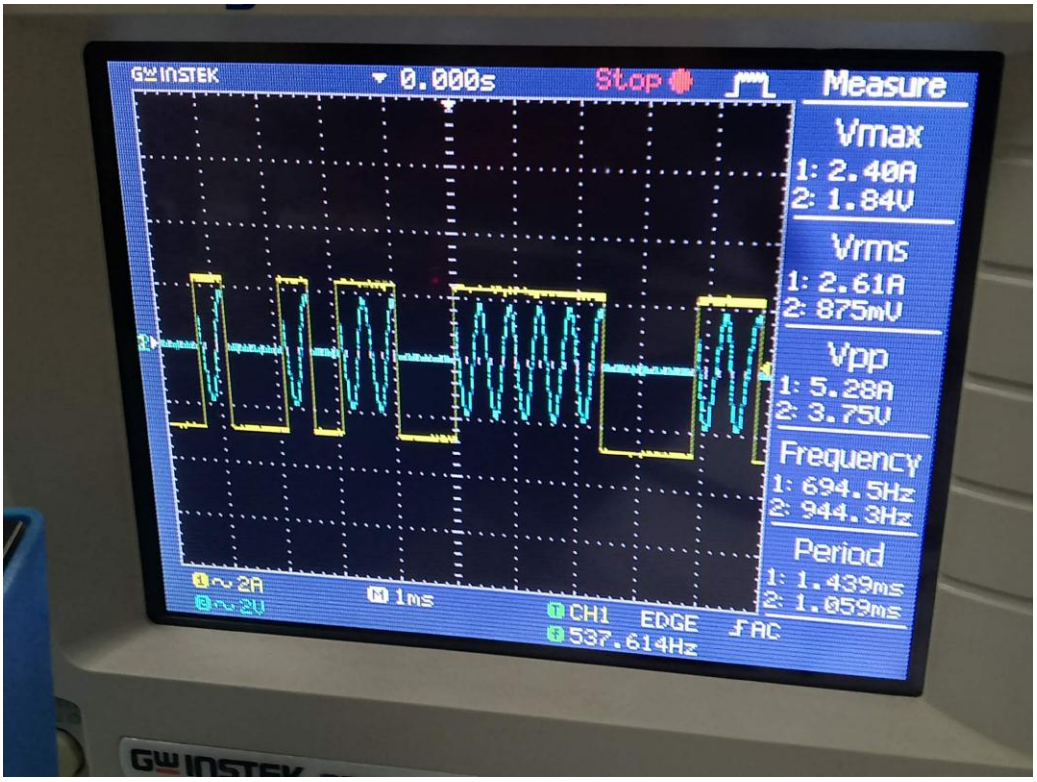

B:

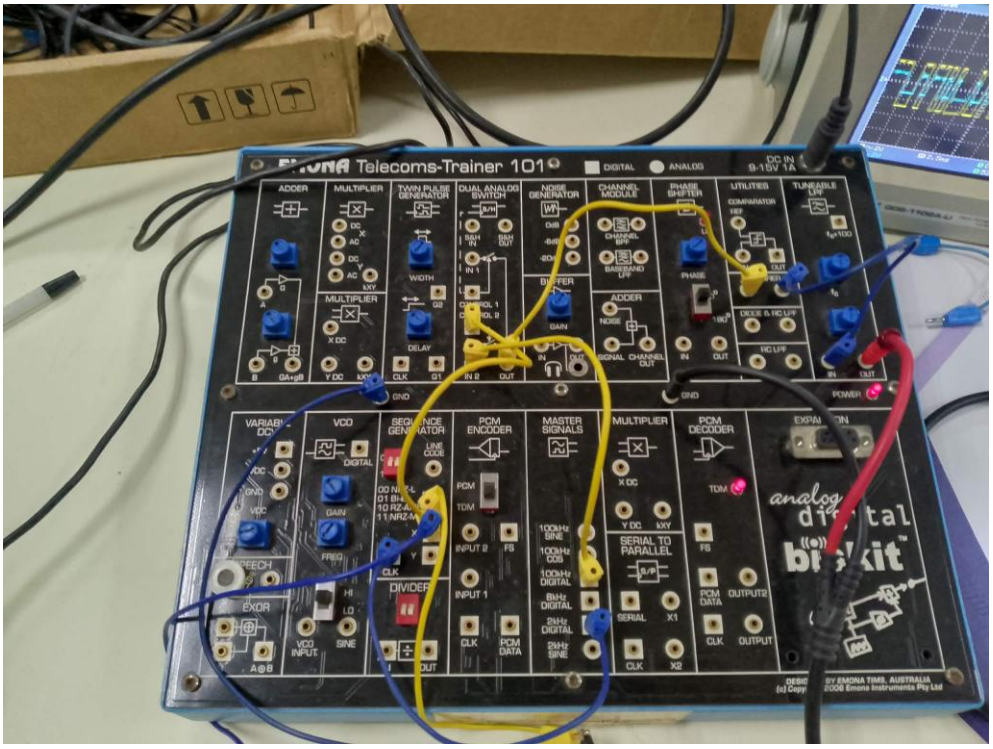
Telecoms-Trainer 101
DIGITAL
ANALOG
ADDER
MULTIPLIER
TWIN PULSE GENERATOR
DUAL ANALOG SWITCH
NOISE GENERATOR
CHANNEL MODULE
PHASE SHIFTER
UTILITIES
TUNEABLE LPF
VCO
PCM ENCODER
MASTER SIGNALS
PCM DECODER
DIVIDER
SERIAL TO PARALLEL
analog digital bitkit

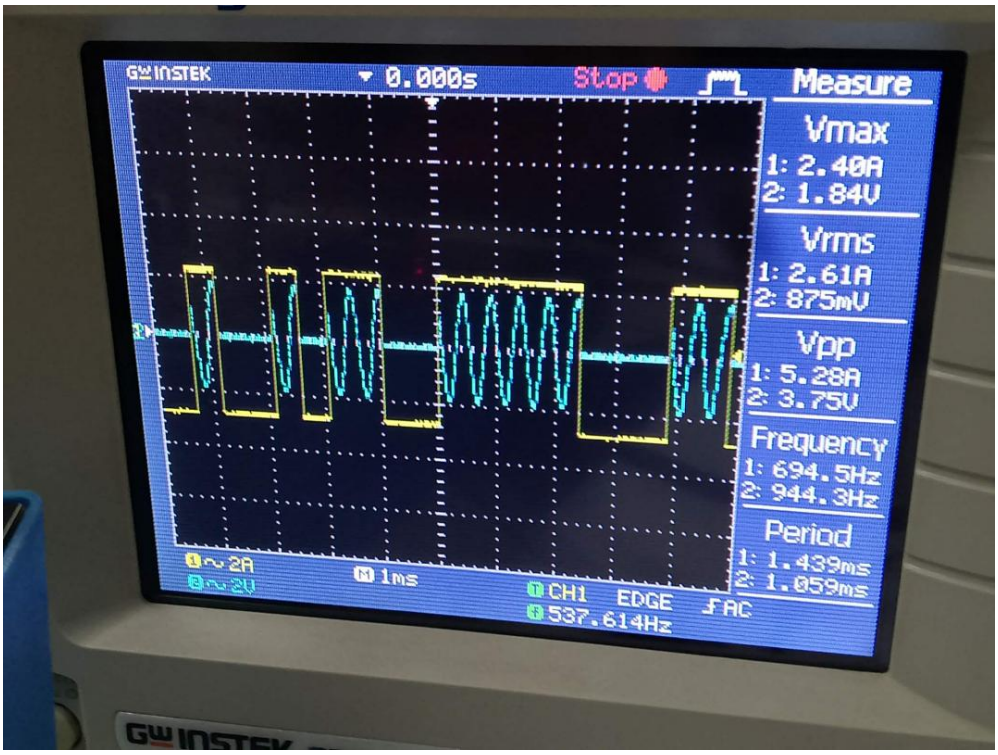
GW INSTEK
0.000s
Stop
Measure
Vmax
1: 2.40A
2: 1.84V
Vrms
1: 2.61A
2: 875mV
Vpp
1: 5.28A
2: 3.75V
Frequency
1: 694.5Hz
2: 944.3Hz
Period
1: 1.439ms
2: 1.059ms
1 2A
2 2V
M 1ms
T CH1 EDGE AC
537.614Hz

C:

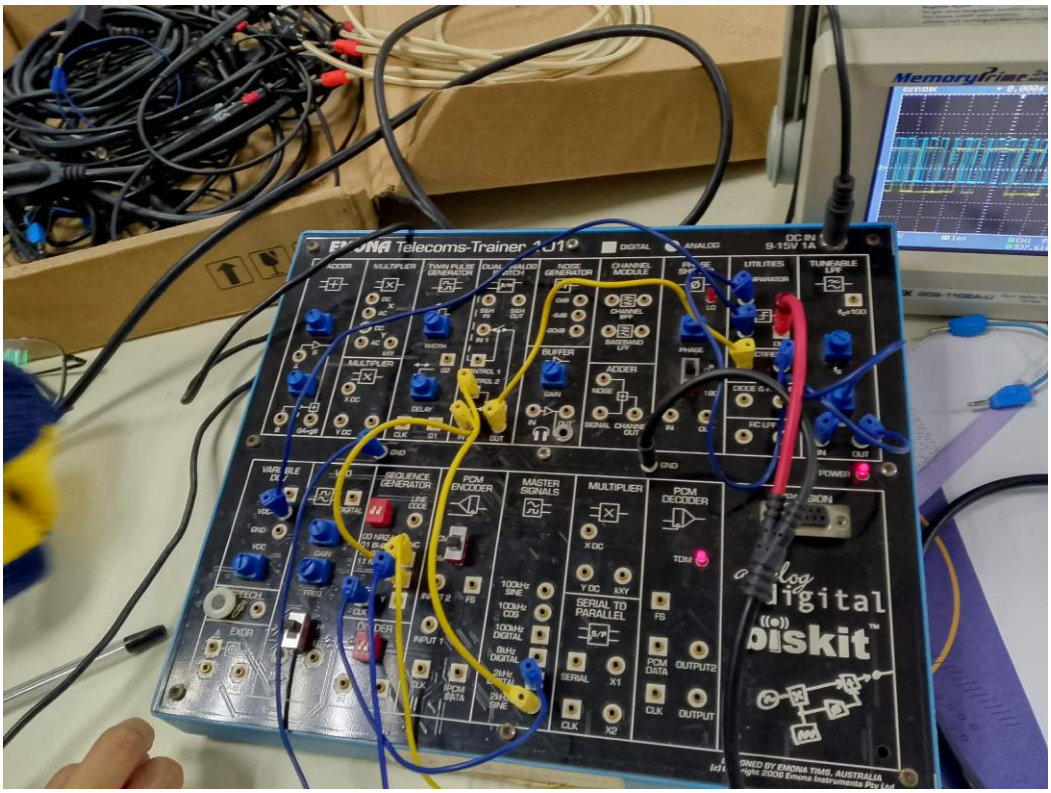
EMONA Telecoms-Trainer 101
DIGITAL
ANALOG
DC IN
9-15V 1A
MULTIPLIER
TWIN PULSE GENERATOR
NOISE GENERATOR
CHANNEL MODULE
UTILITIES
TUNEABLE LPF
BUFFER
ADDER
SEQUENCE GENERATOR
PCM ENCODER
MASTER SIGNALS
MULTIPLIER
PCM DECODER
SERIAL TO PARALLEL
POWER
analog digital
diskit

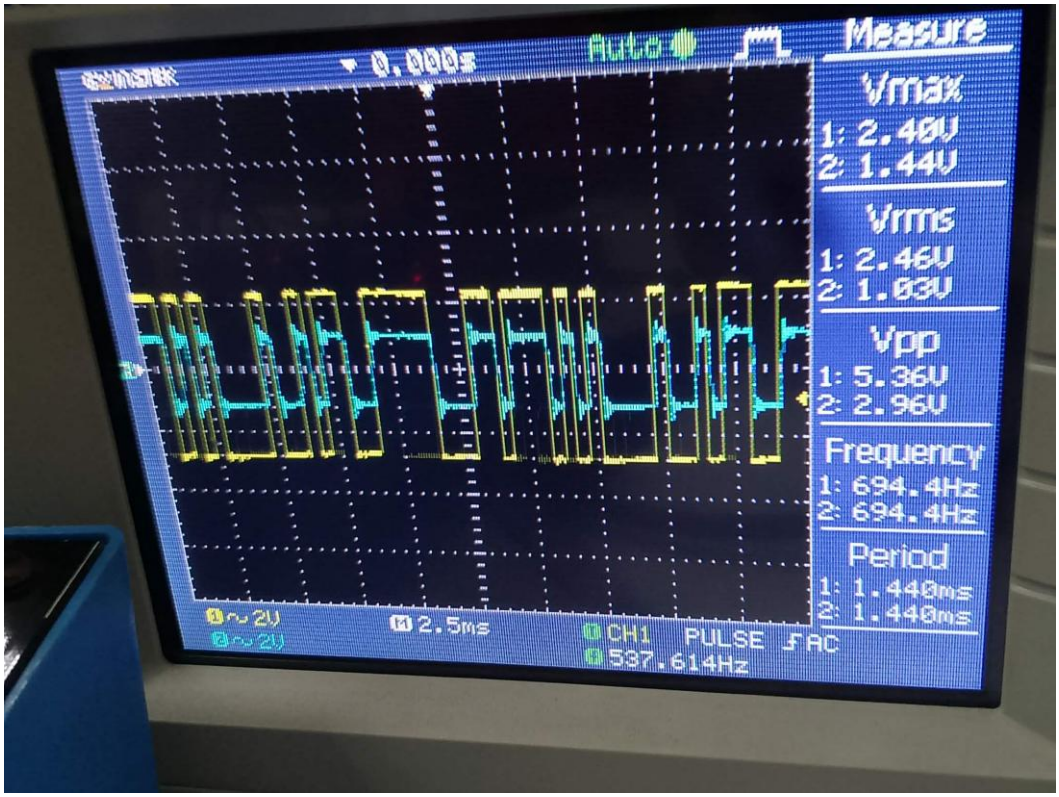
0.000s
Auto
Measure
Vmax
1: 2.40V
2: 1.44V
Vrms
1: 2.46V
2: 1.03V
Vpp
1: 5.36V
2: 2.96V
Frequency
1: 694.4Hz
2: 694.4Hz
Period
1: 1.440ms
2: 1.440ms
2V
2V
2.5ms
CH1 PULSE AC
537.614Hz

Experiment 16:

Block Diagram:

A:

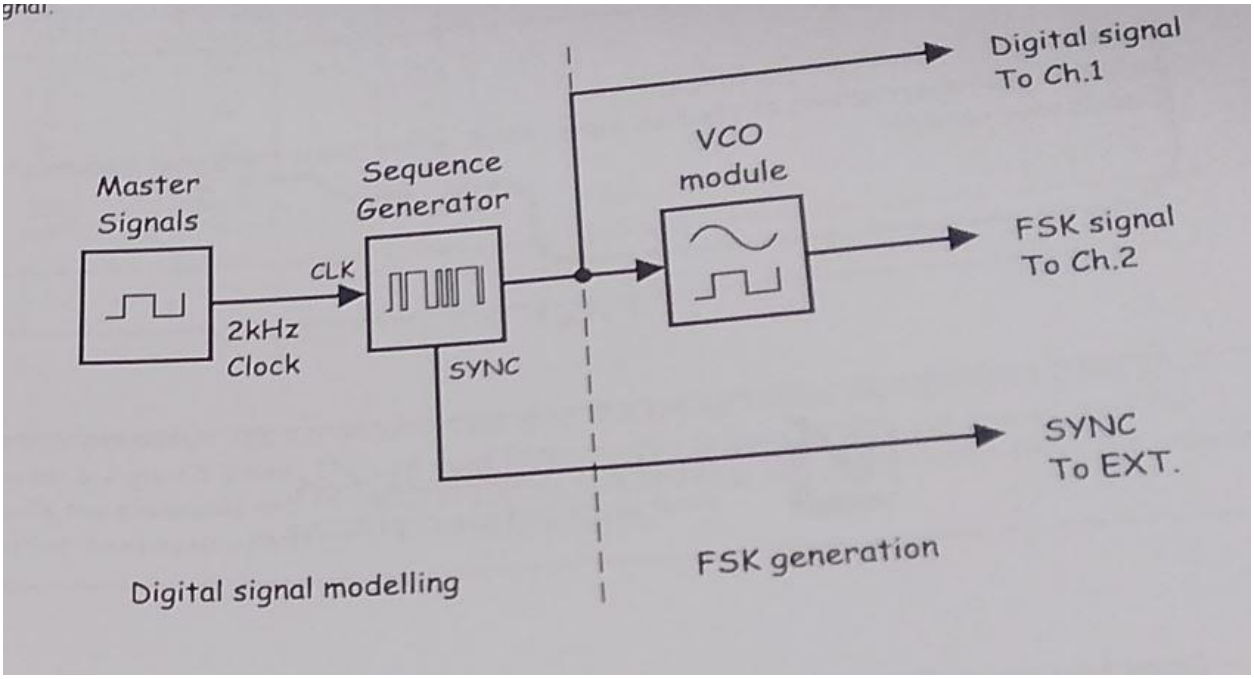

B:

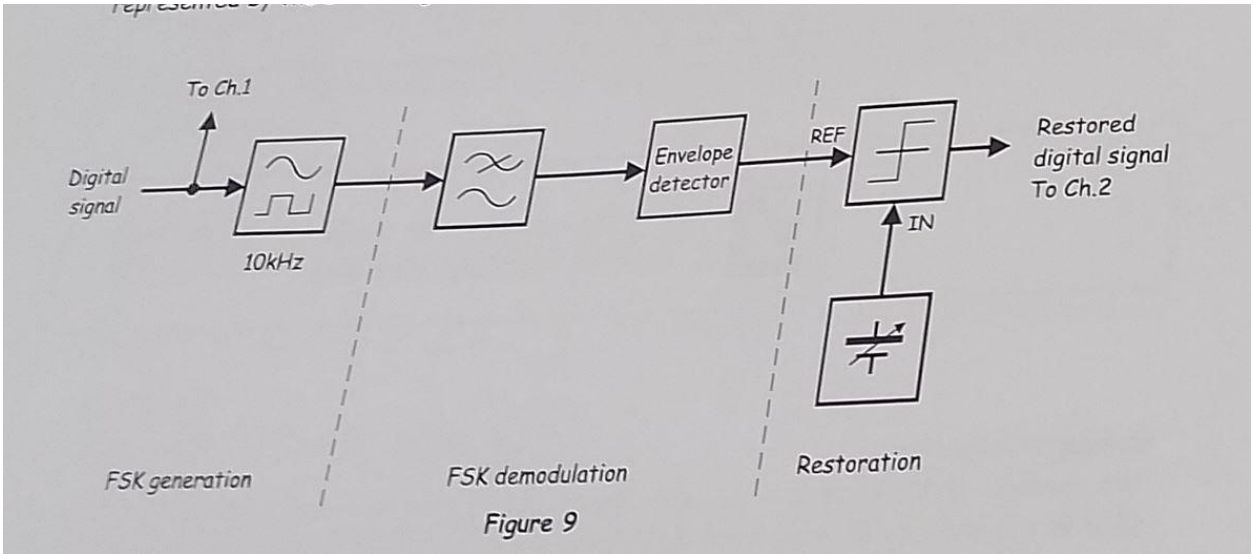

Figure 9

Set Up and Result:

A:

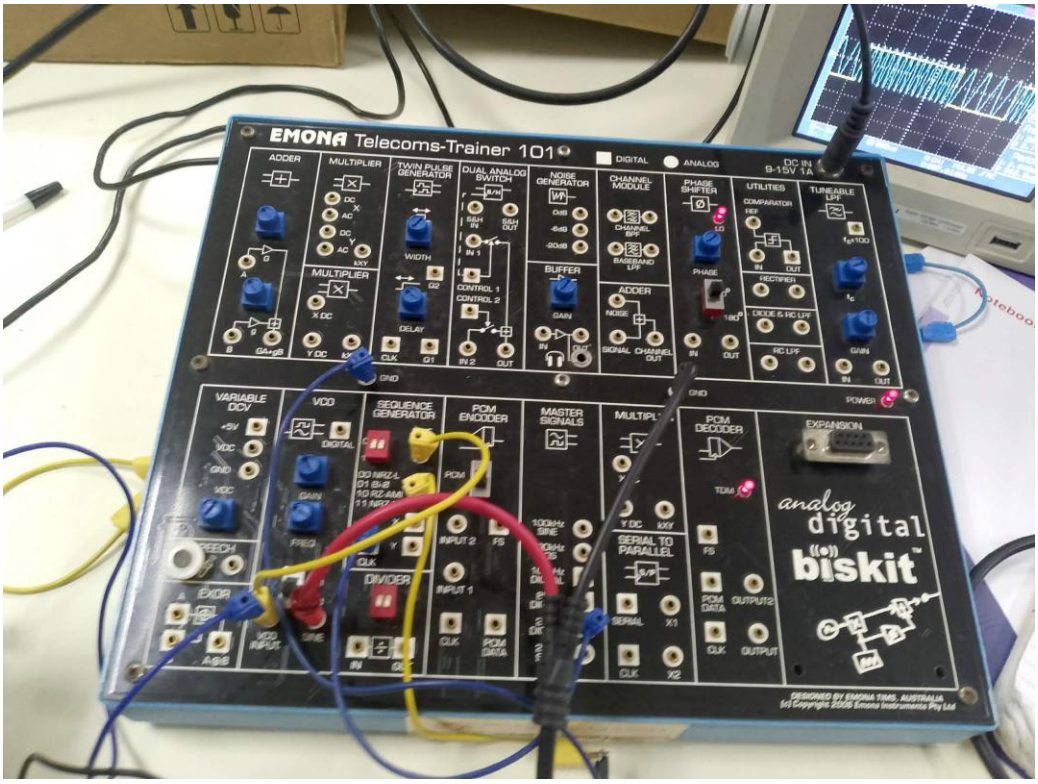

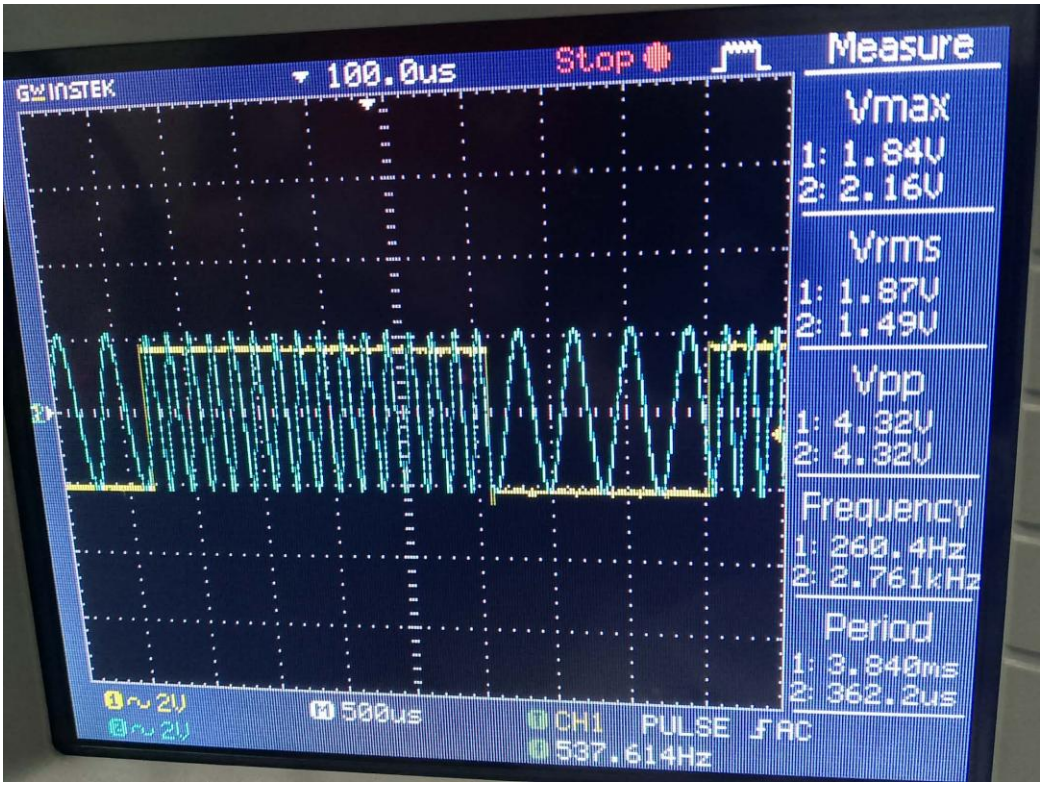

B:

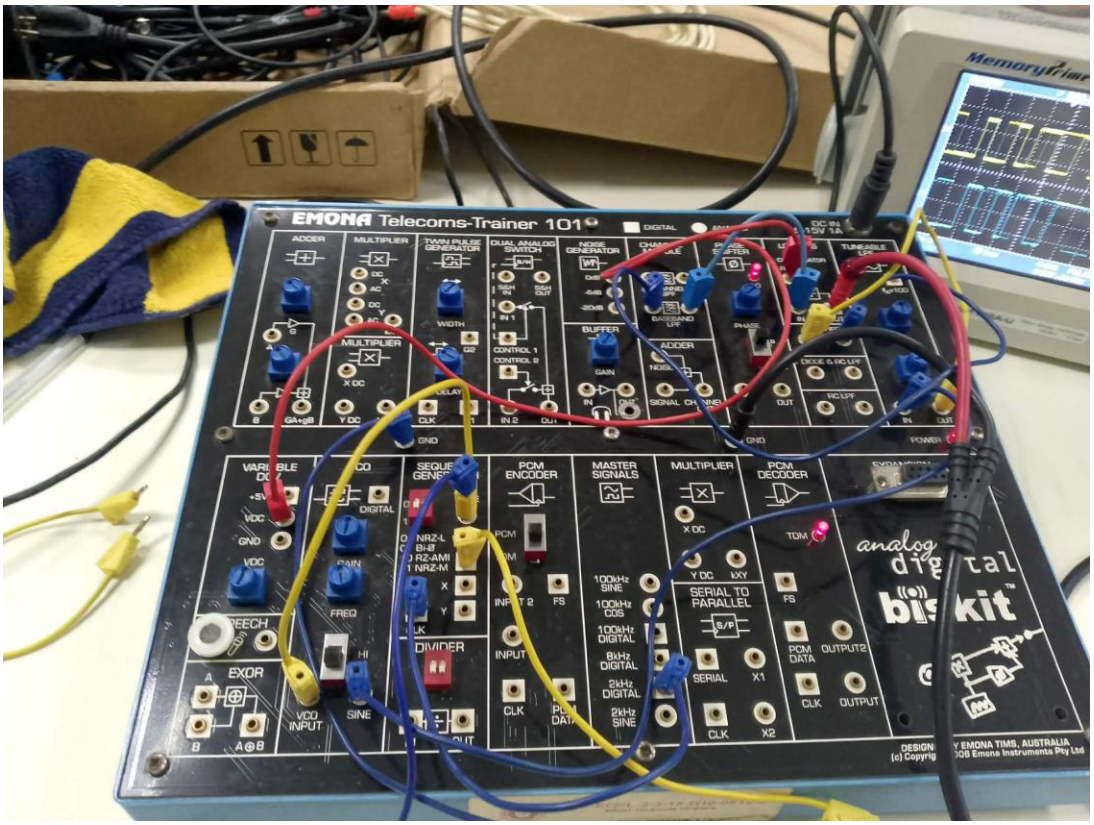
EMONA Telecoms-Trainer 101
ADDER
MULTIPLIER
TWIN PULSE GENERATOR
DUAL ANALOG SWITCH
NOISE GENERATOR
BUFFER
PCM ENCODER
MASTER SIGNALS
PCM DECODER
SERIAL TO PARALLEL
DIVIDER
EXOR
VCO INPUT
SINE
analog digital bikit

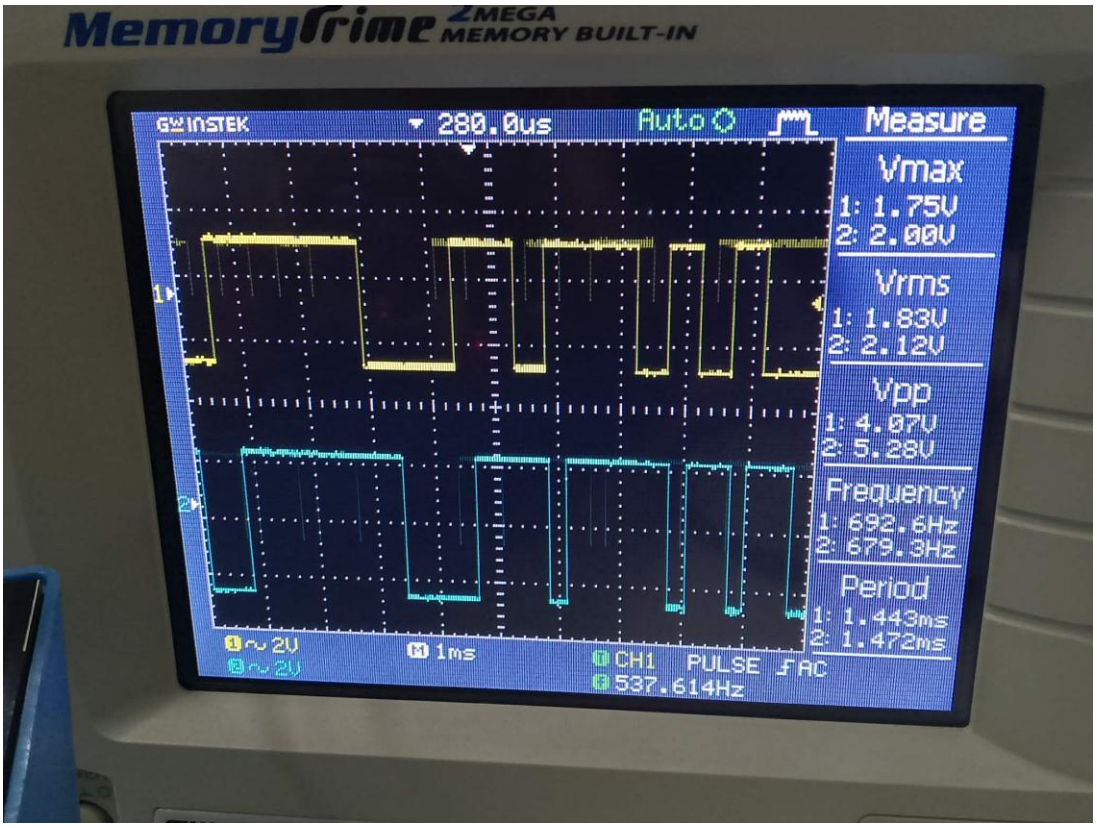
MemoryPrime 2MEGA MEMORY BUILT-IN
GW INSTEK
280.0us
Auto
Measure
Vmax
1: 1.75V
2: 2.00V
Vrms
1: 1.83V
2: 2.12V
Vpp
1: 4.07V
2: 5.28V
Frequency
1: 692.6Hz
2: 679.3Hz
Period
1: 1.443ms
2: 1.472ms
2V
2V
1ms
CH1 PULSE AC
537.614Hz

Experiment 17:

Block Diagram:

A:

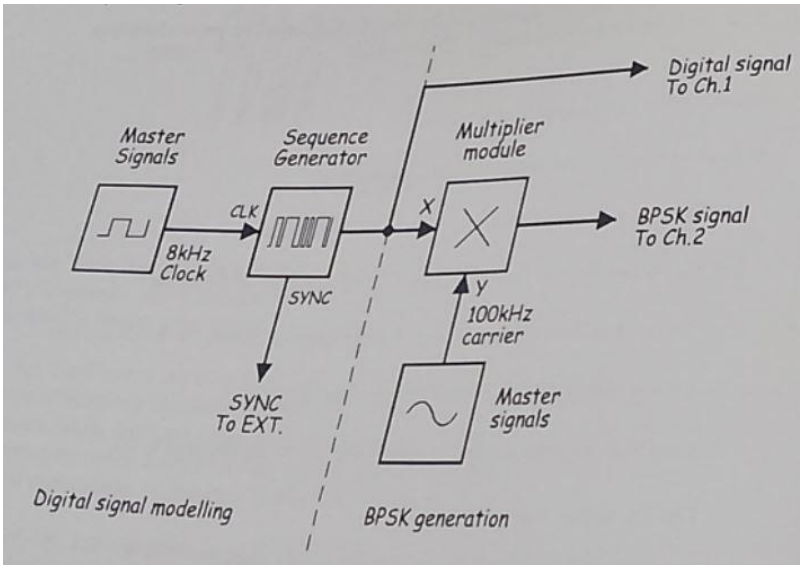

B:

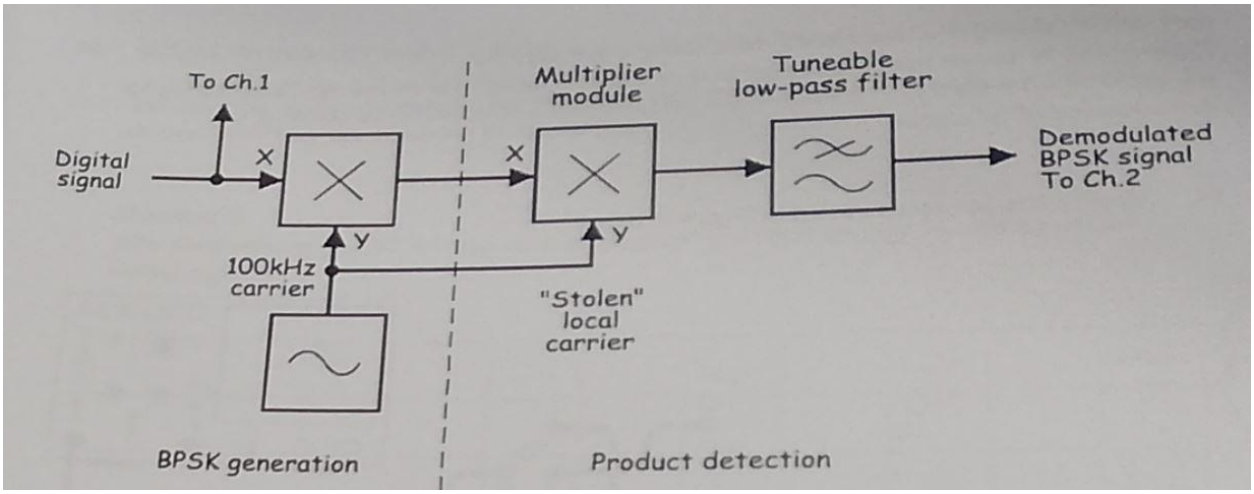

C:

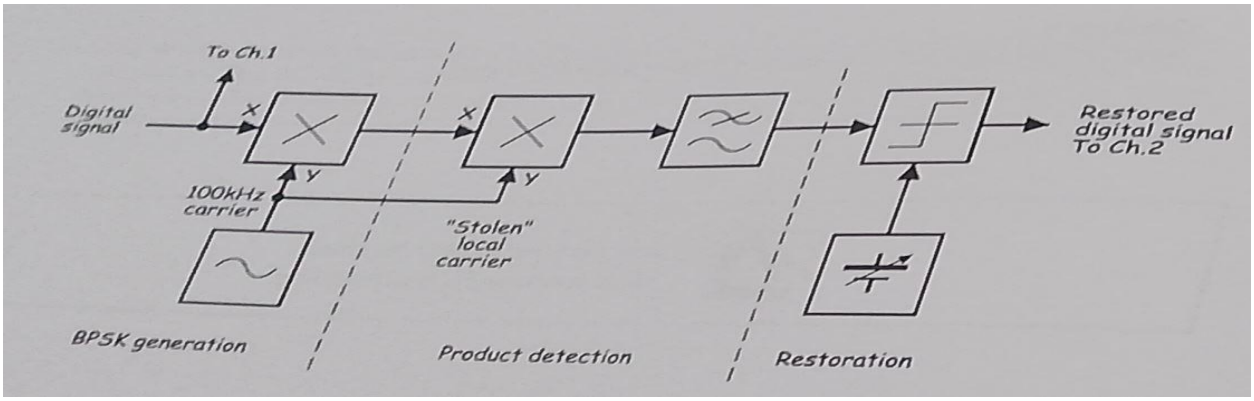

Set Up and Results:

A:

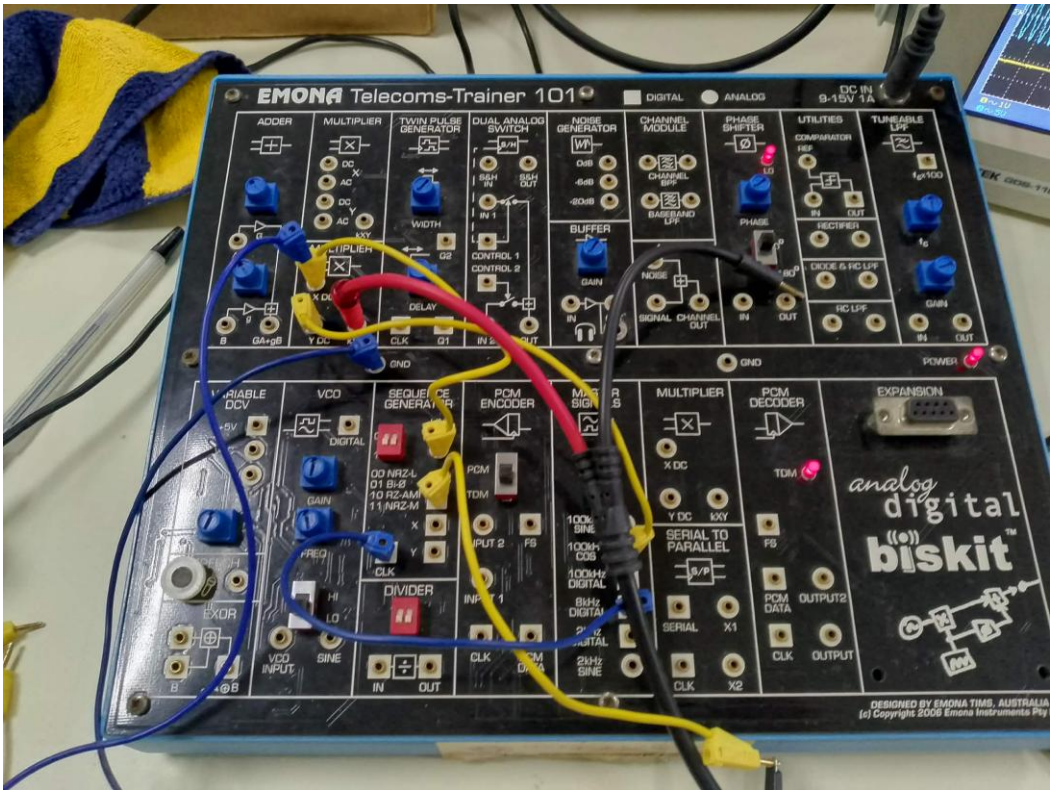

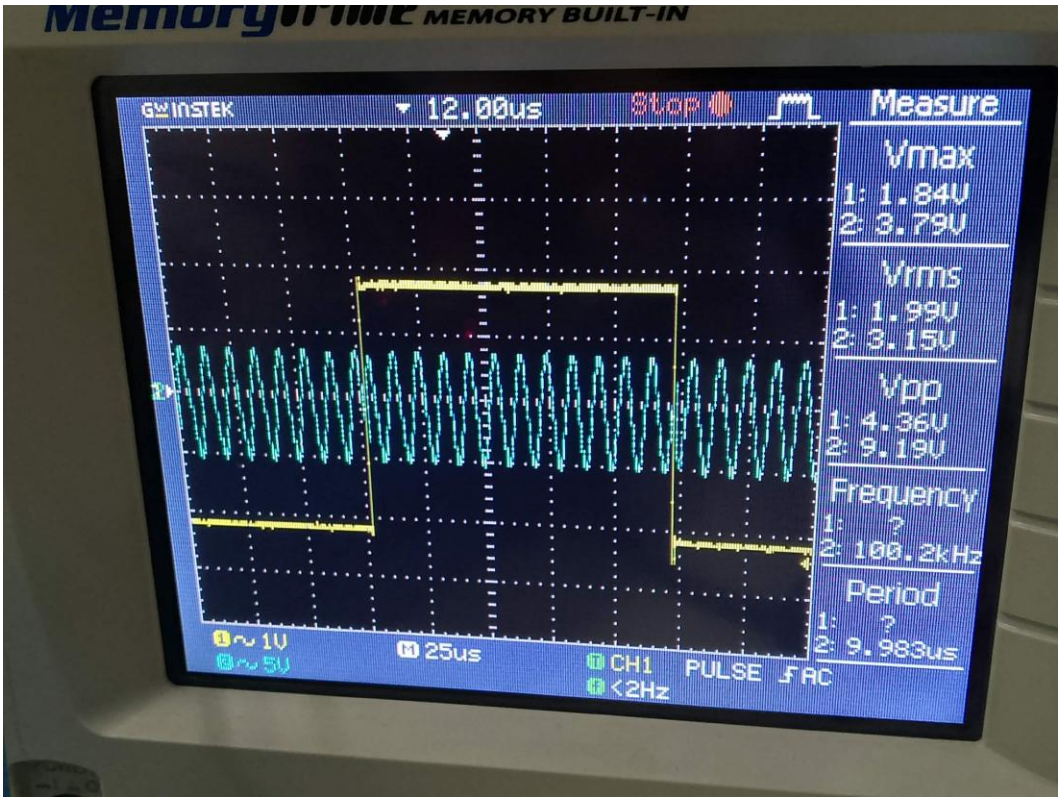

B:

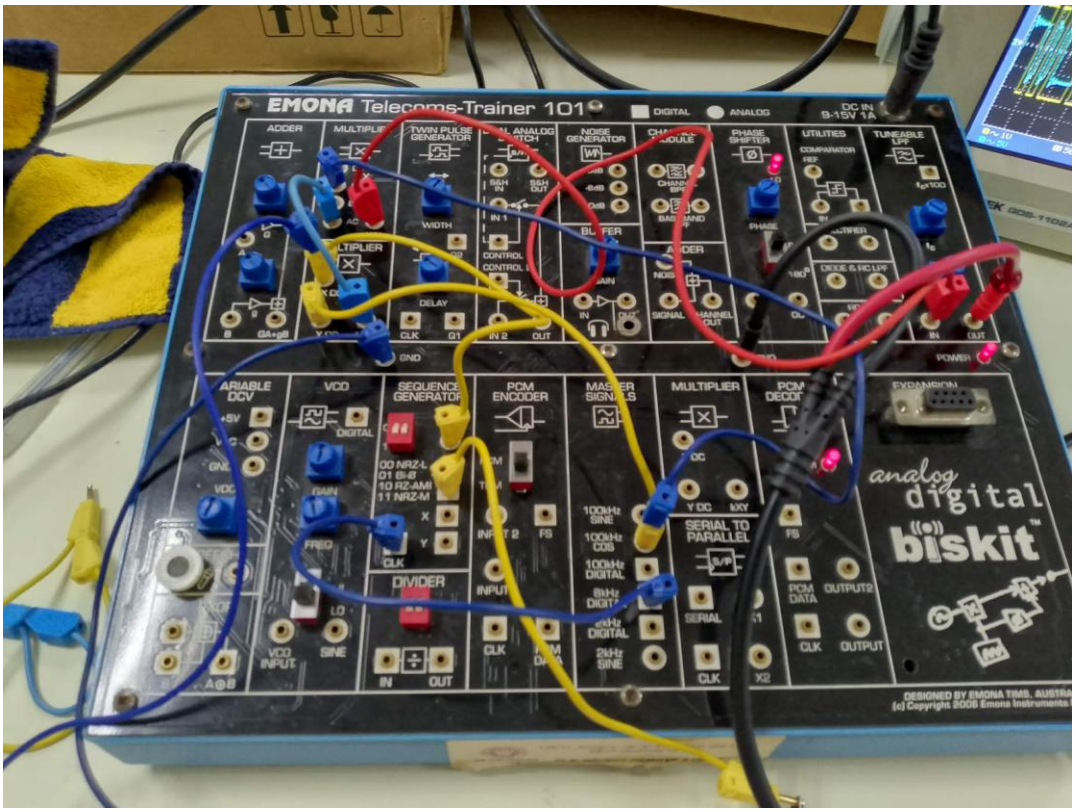
EMONA Telecoms-Trainer 101
DIGITAL
ANALOG
ADDER
MULTIPLIER
TWIN PULSE GENERATOR
NOISE GENERATOR
PHASE SHIFTER
UTILITIES
TUNEABLE LPF
VARIABLE DCV
VCO
SEQUENCE GENERATOR
PCM ENCODER
MASTER SIGNALS
MULTIPLIER
EXPANSION
DIVIDER
SERIAL TO PARALLEL
analog digital
biskit

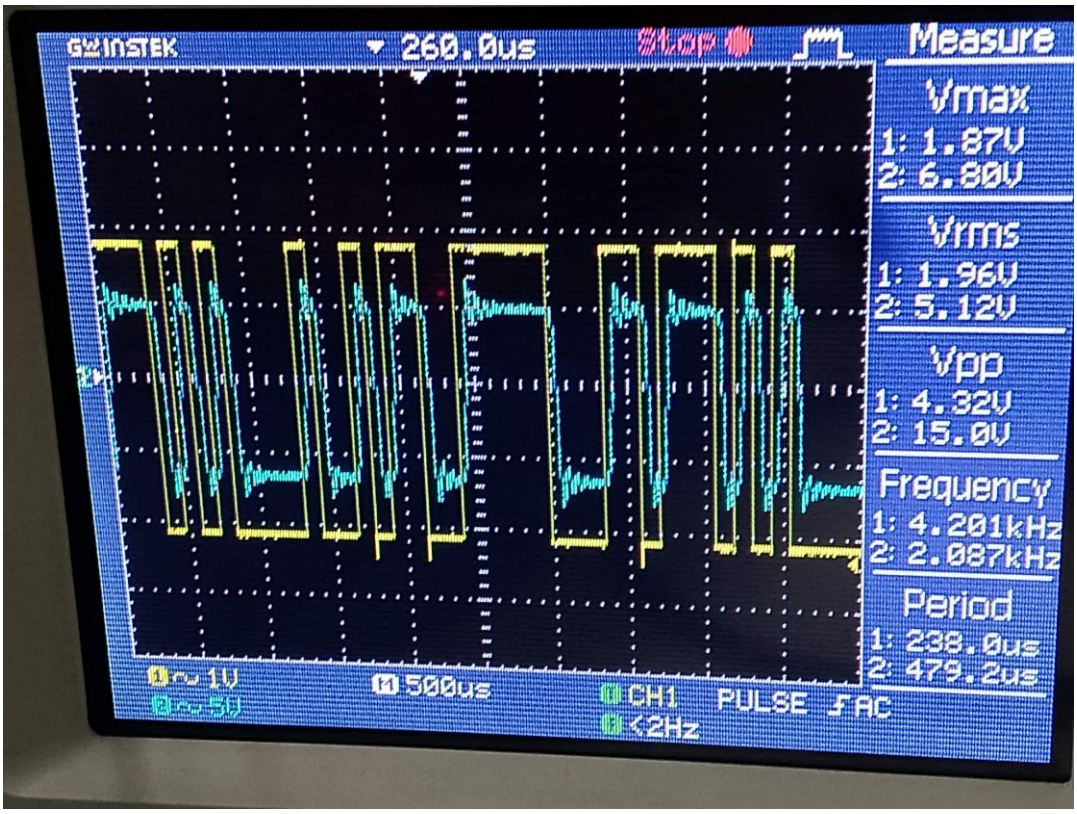
GW INSTEK
260.0us
Stop
Measure
Vmax
1: 1.87V
2: 6.80V
Vrms
1: 1.96V
2: 5.12V
Vpp
1: 4.32V
2: 15.0V
Frequency
1: 4.201kHz
2: 2.087kHz
Period
1: 238.0us
2: 479.2us
1 1V
2 5V
500us
CH1
<2Hz
PULSE
AC

C:

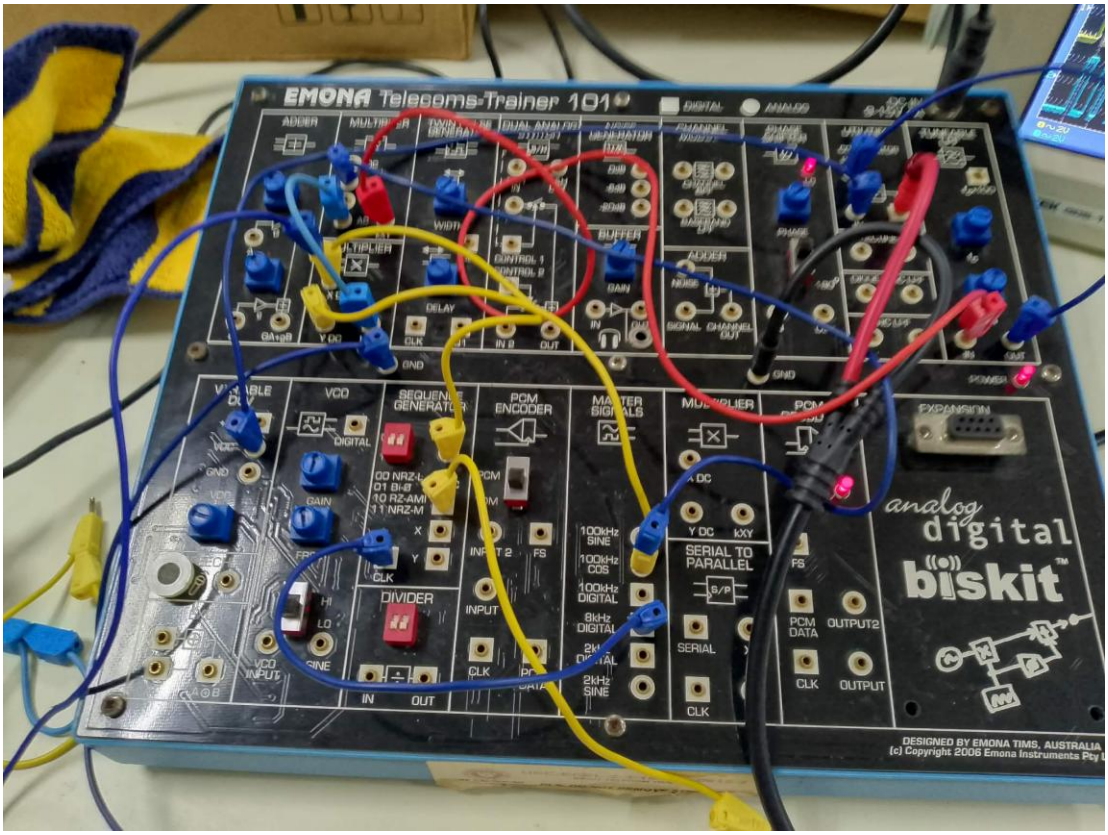
EMONA Telecoms-Trainer 101
ADDER
MULTIPLIER
DELAY
BUFFER
VCO
SEQUENCE GENERATOR
PCM ENCODER
MASTER SIGNALS
MULTIPLIER
EXPANSION
DIVIDER
SERIAL TO PARALLEL
analog
digital
biskit
DESIGNED BY EMONA TIMS, AUSTRALIA
(c) Copyright 2006 Emona Instruments Pty

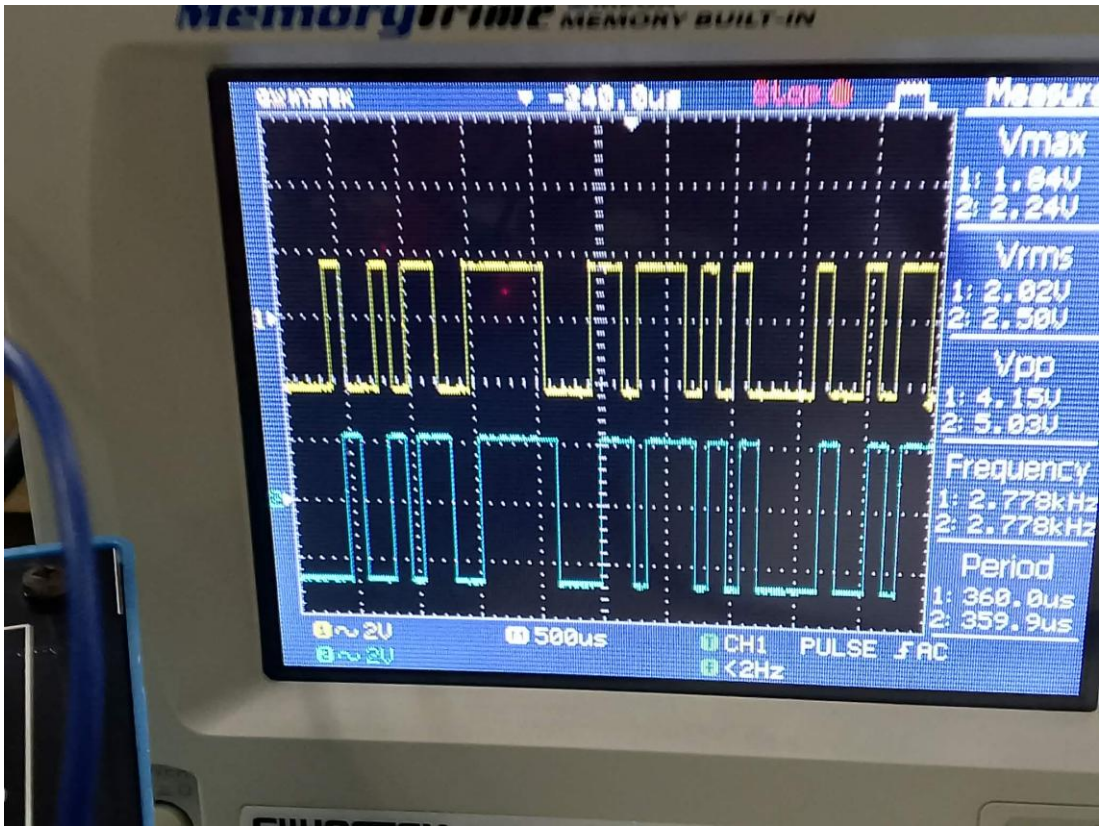
MEMORY BUILT-IN
Vmax
1: 1.84V
2: 2.24V
Vrms
1: 2.02V
2: 2.30V
Vpp
1: 4.13V
2: 5.03V
Frequency
1: 2.778kHz
2: 2.778kHz
Period
1: 360.0us
2: 359.9us
500us
CH1
PULSE
AC
<2Hz

Experiment 18

Block Diagram:

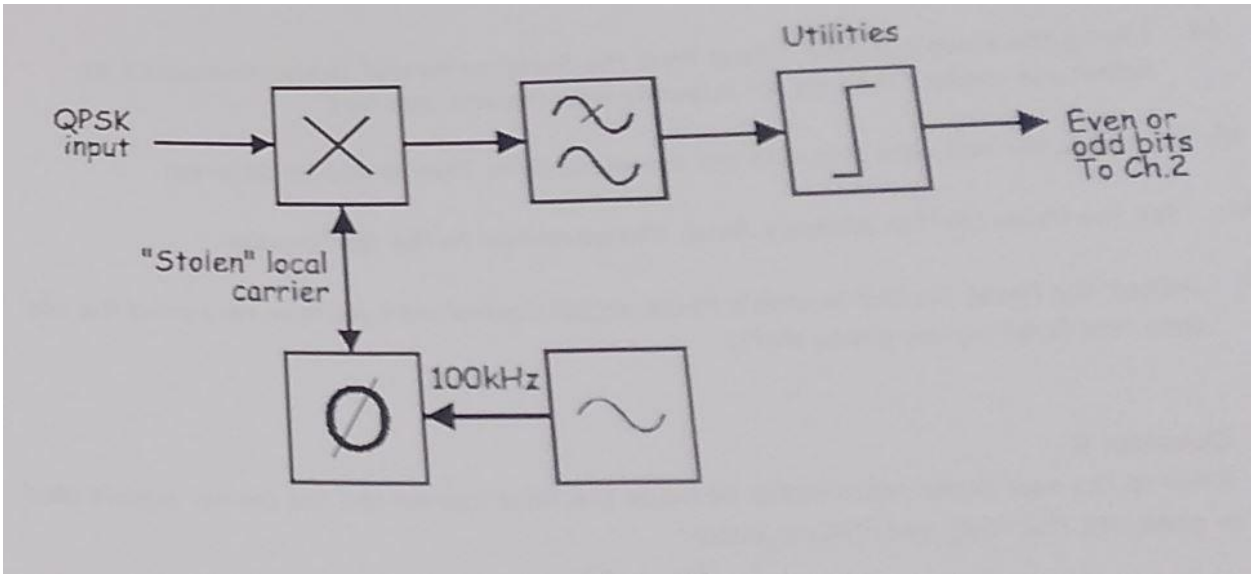

Set Up and Result:

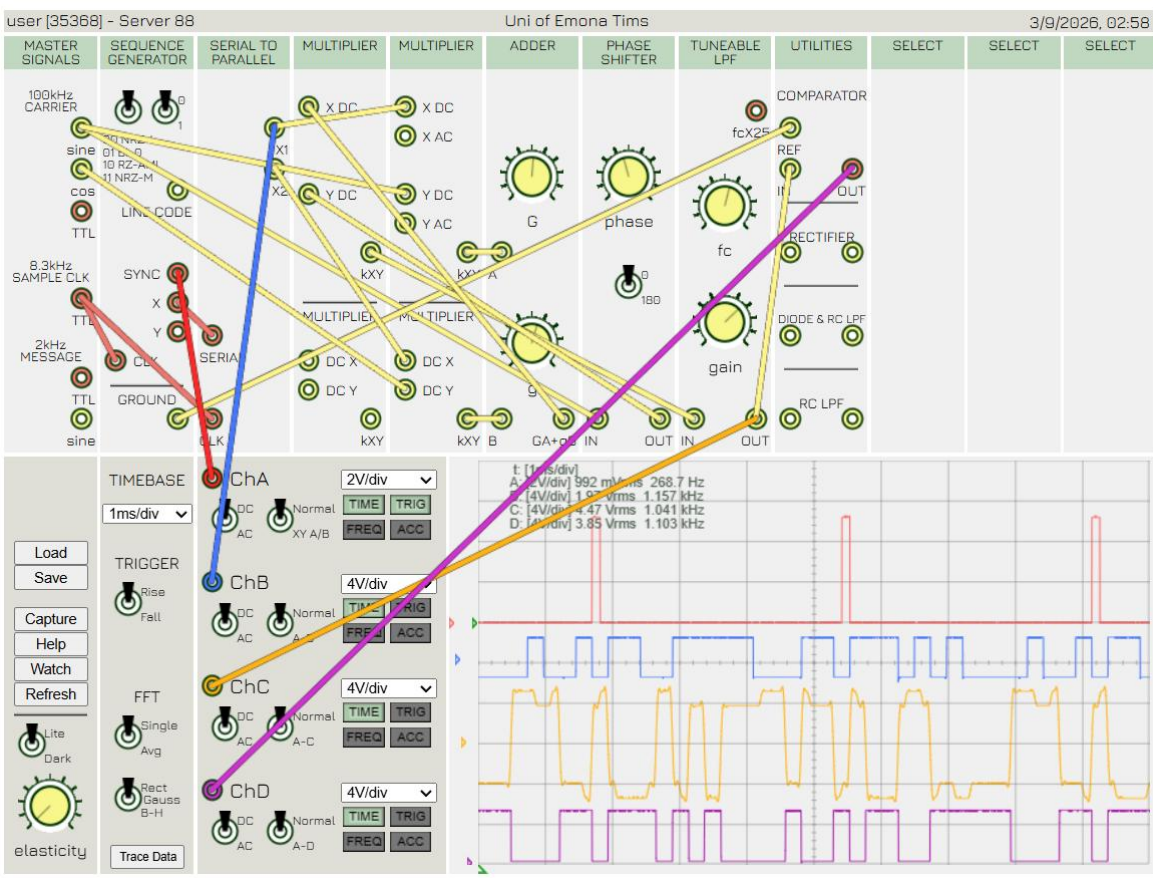

Experiment 19

Block Diagram:

A:

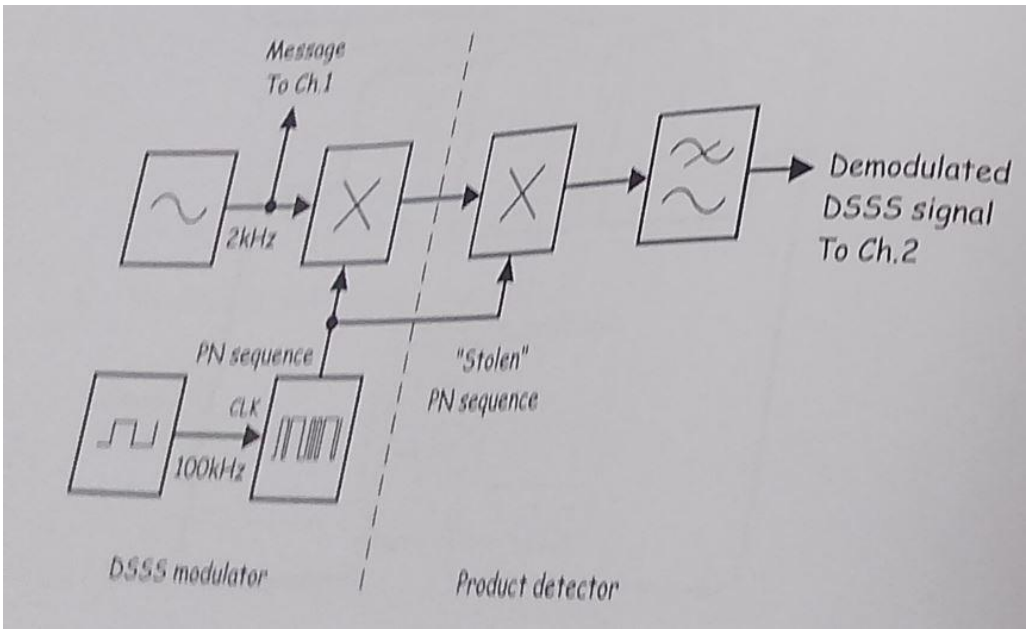

B:

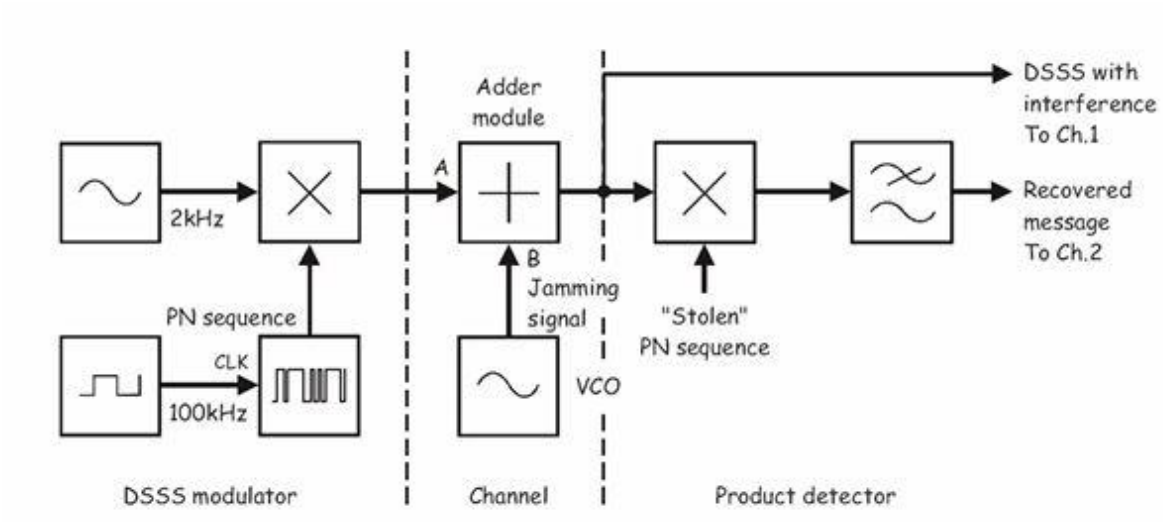

Set Up and Result:

A:

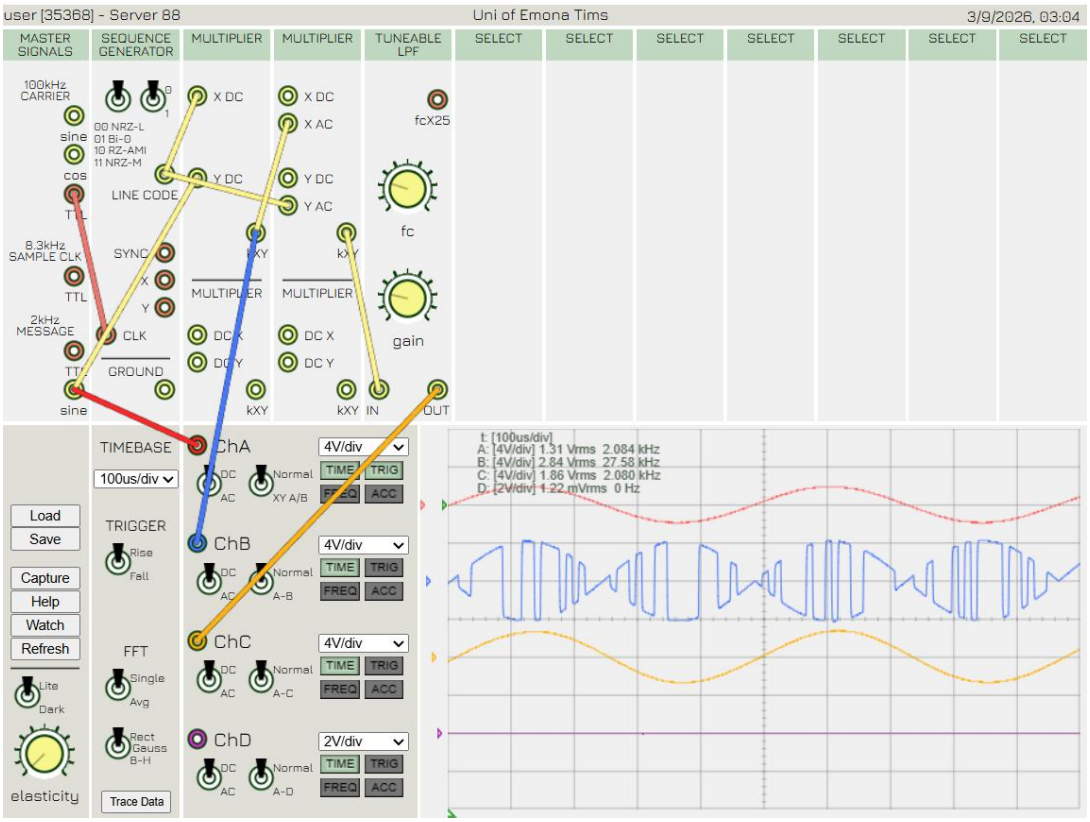

B:

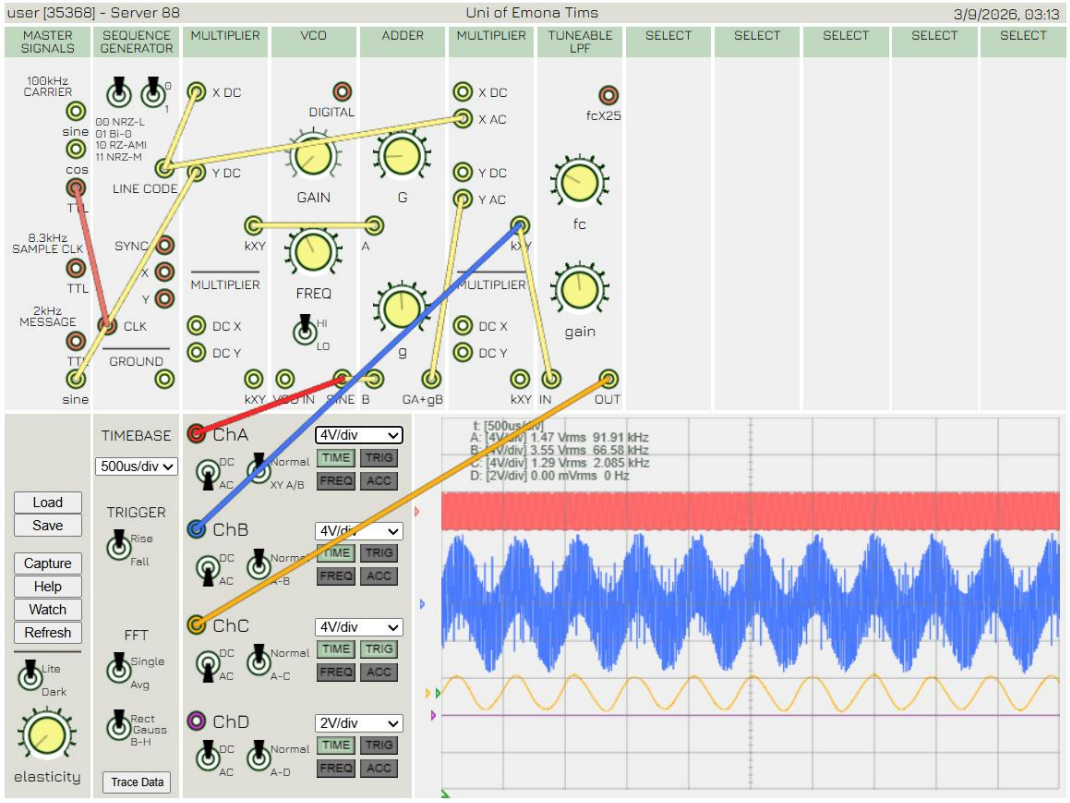

Experiment 20

Block Diagram:

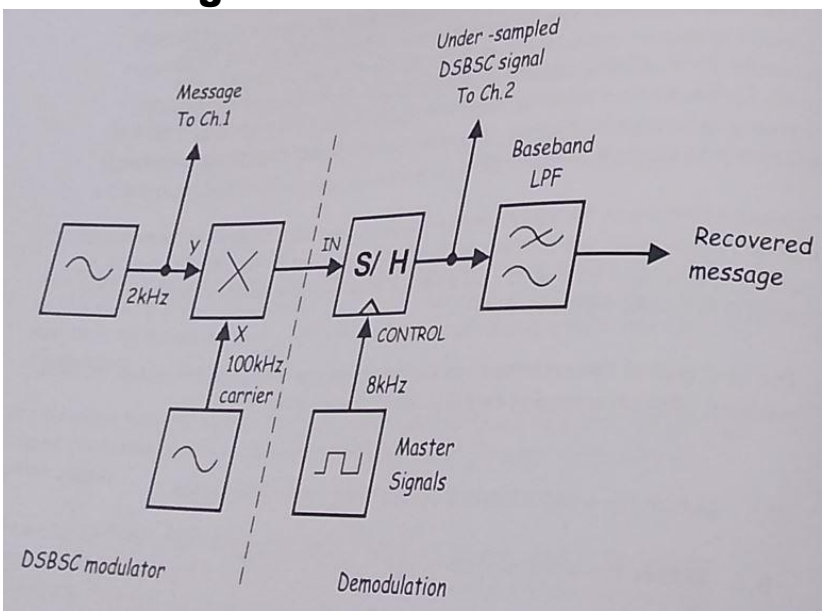
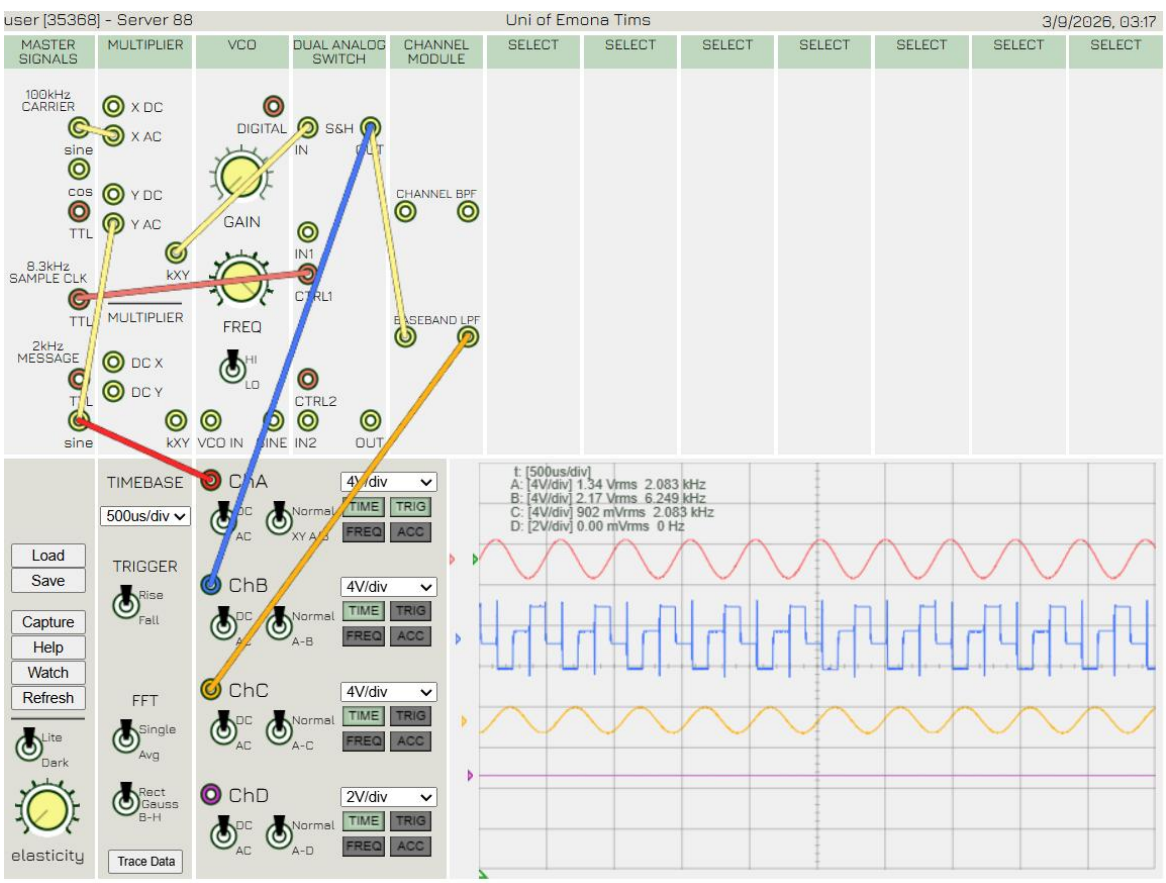
Set Up and Result: